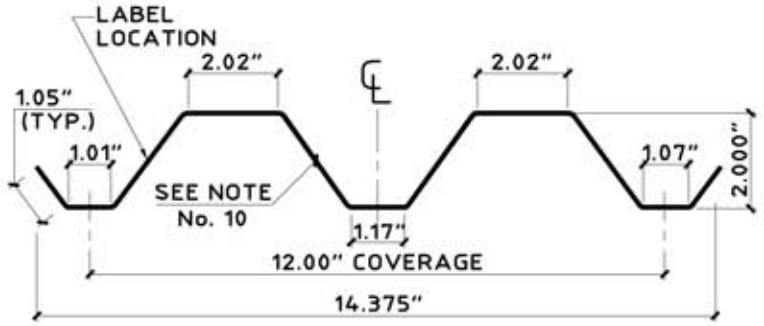

1 STORM PANEL
SCALE : 3" = 1'-0"

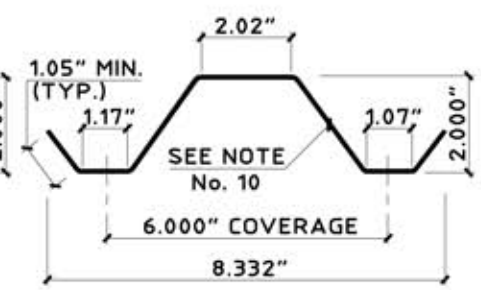

1a HALF STORM PANEL
SCALE : 3" = 1'-0"

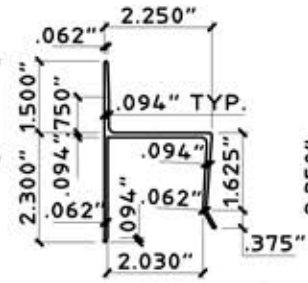

2 "h" HEADER
SCALE : 3" = 1'-0"

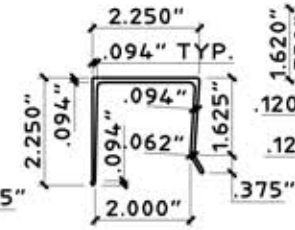

3 "U" HEADER
SCALE : 3" = 1'-0"

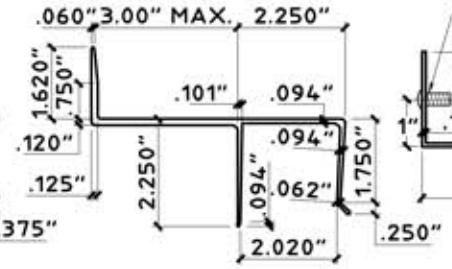

3a BUILD-OUT "U" HEADER
SCALE : 3" = 1'-0"

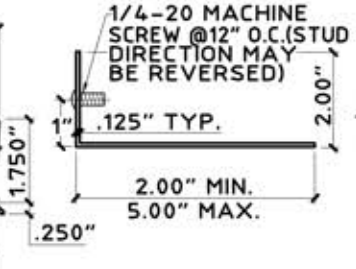

4 STUD ANGLE
SCALE : 3" = 1'-0"

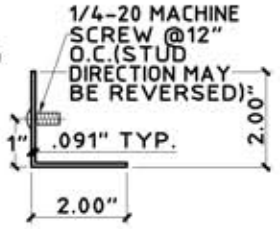

4a STUD ANGLE
SCALE : 3" = 1'-0"

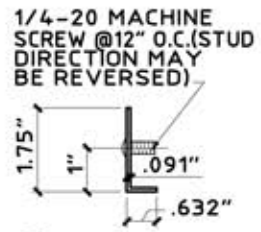

4b STUD ANGLE
SCALE : 3" = 1'-0"

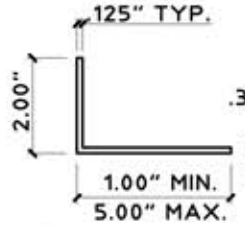

5 ANGLE
SCALE : 3" = 1'-0"

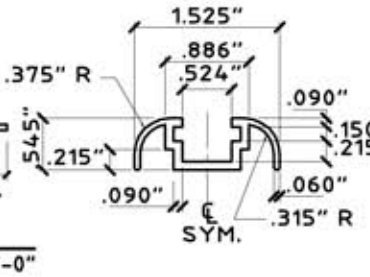

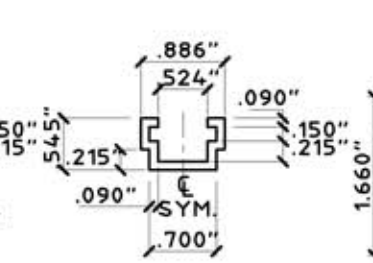

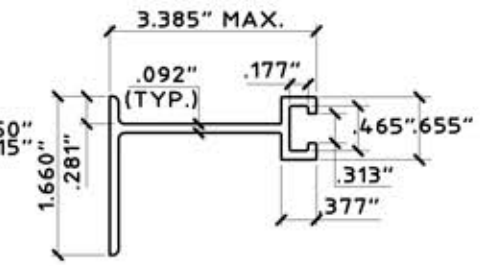

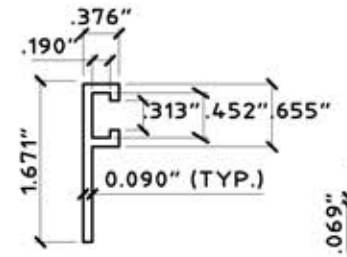

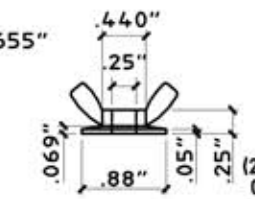

(ZAMAC 3 ALLOY)
9 WING NUT
SCALE : HALF SIZE

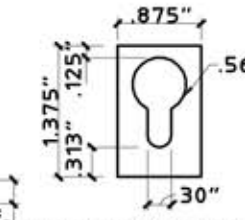

(20 GA. GALV. STEEL GR 40 OR 0.050" 6063-T6 ALUM)

10 KEYHOLE WASHER
SCALE : HALF SIZE

GENERAL NOTES:

1. THIS PRODUCT EVALUATION DOCUMENT REPRESENTS A SHUTTER SYSTEM DESIGNED AND TESTED IN ACCORDANCE WITH THE FLORIDA BUILDING CODE. THIS PRODUCT IS SUITABLE FOR INSTALLATION IN AREAS OF THE HIGH VELOCITY HURRICANE ZONE (HVHZ).
2. THIS SHUTTER SYSTEM HAS BEEN TESTED FOR LARGE MISSILE IMPACT CYCLIC LOAD AND UNIFORM STATIC AIR PRESSURE IN CONFORMANCE WITH FLORIDA BUILDING CODE TAS 201, 202 AND 203.
3. NO INCREASE IN ALLOWABLE STRESS HAS BEEN USED IN THE DESIGN OF THIS PRODUCT. WIND LOAD DURATION FACTOR OF 1.6 WAS USED FOR LAG SCREW DESIGN IN WOOD.
4. DETERMINE THE POSITIVE AND NEGATIVE DESIGN LOADS TO USE WHEN REFERENCING THESE DOCUMENTS IN ACCORDANCE WITH THE GOVERNING CODE AND GOVERNING WIND VELOCITY.
5. THESE PRODUCT EVALUATION DOCUMENTS ARE PREPARED BY THE PRODUCT ENGINEER AND ARE GENERIC. THEY DO NOT INCLUDE INFORMATION PREPARED FOR A SPECIFIC SITE.
6. USE OF THESE PRODUCT EVALUATION DOCUMENTS SHALL COMPLY WITH CHAPTER 61G15-23 OF THE FLORIDA ADMINISTRATIVE CODE.
7. THESE PRODUCT EVALUATION DOCUMENTS ARE INTENDED FOR USE ONLY BY A LICENSED CONTRACTOR, PROFESSIONAL ENGINEER OR REGISTERED ARCHITECT AND ARE SUITABLE TO BE APPLIED BY THE CONTRACTOR PROVIDED THE CONTRACTOR DOES NOT DEVIATE FROM THE CONDITIONS DETAILED HEREIN AND THE CONTRACTOR VERIFIES THAT THE EXISTING STRUCTURE DOES NOT DEVIATE IN EITHER FORM OR MATERIAL FROM THE STRUCTURAL SUBSTRATES DETAILED HEREIN. CONTRACTOR SHALL VERIFY EXISTING STRUCTURE CAN WITHSTAND SUPERIMPOSED LOAD OF SHUTTER.
8. ALTERATIONS OR ADDITIONS TO THIS DOCUMENT ARE NOT PERMITTED.
9. WHEN THE SITE CONDITIONS DEVIATE FROM THESE PRODUCT EVALUATION DOCUMENTS, SITE SPECIFIC DOCUMENTS SHALL BE PREPARED BY A LICENSED AND REGISTERED DELEGATED ENGINEER OR ARCHITECT. SAID DOCUMENTS SHALL BEAR THE DATE, SIGNATURE, AND EMBOSSED SEAL OF THE DELEGATED ENGINEER OR ARCHITECT AND SHALL BE SUBMITTED TO THE PRODUCT ENGINEER FOR REVIEW AS A CONDITION TO THE BUILDING OFFICIAL GRANTING HIS/HER APPROVAL.
10. EACH SHUTTER ASSEMBLY SHALL BE PERMANENTLY LABELED WITHIN 12" OF ONE END OF EACH PANEL AS FOLLOWS:

TOWN & COUNTRY INDUSTRIES
FT. LAUDERDALE, FL
TAS 201, 202 & 203
9 LB. LARGE MISSILE
FBC APPROVED

11. STORM PANELS SHALL BE 3004-H34 OR 5052-H34 OR EQUAL ALUMINUM ALLOY, WITH THE FOLLOWING MINIMUM THICKNESS AND MECHANICAL PROPERTIES: NOMINAL 0.0615" MINIMUM Fy = 25.0 K.S.I.
12. ALL BOLTS AND WASHERS SHALL BE GALVANIZED OR STAINLESS STEEL WITH A MINIMUM TENSILE STRENGTH OF 60 K.S.I.
13. ALL EXTRUSIONS SHALL BE 6063-T6 ALUMINUM ALLOY, U.O.N.
14. MATERIAL SPECIFICATIONS NOTED HEREIN ARE THE MANUFACTURER'S REPRESENTATION OF MATERIALS USED IN PRODUCT TESTING.
15. TOP & BOTTOM DETAILS SHOWN MAY BE INTERCHANGED AS FIELD CONDITIONS DICTATE. PANELS MAY BE MOUNTED HORIZONTALLY WHERE APPLICABLE. h & U HEADERS MAY NOT BE USED FOR HORIZONTAL MOUNTING CONDITIONS.
16. IF PANEL OVERLAPS OPENING BY 1.5 TIMES THE GAP BETWEEN WALL AND PANEL, NO SIDE CLOSURE ARE REQUIRED.

6 C-TRACK (FINISH)
SCALE : HALF SIZE

6a C-TRACK
SCALE : HALF SIZE

7 BUILD-OUT F-TRACK
SCALE : HALF SIZE

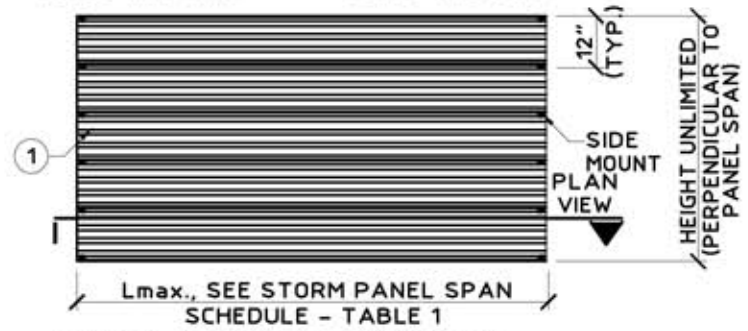

TYPICAL HORIZONTAL ELEVATION
SCALE: 1/4" = 1' - 0"

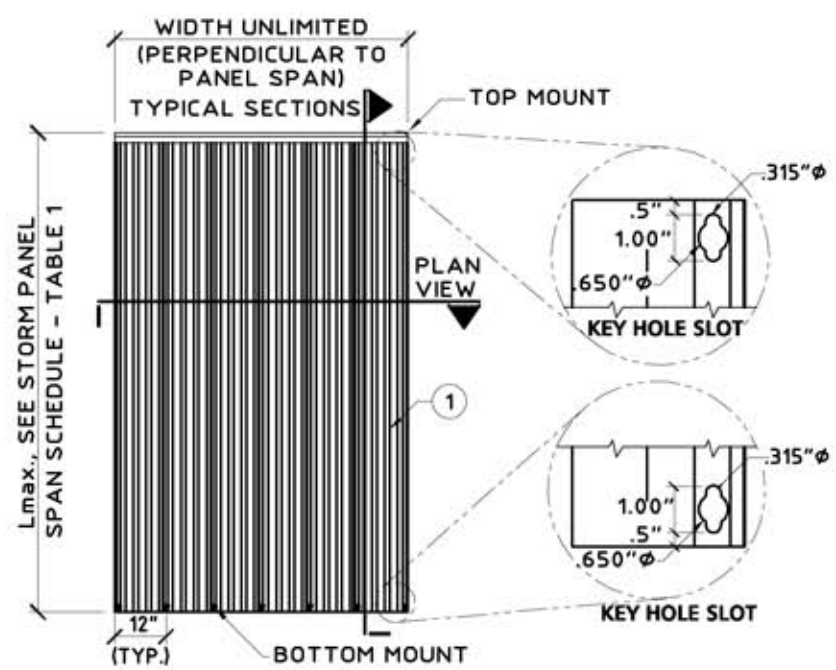

TYPICAL VERTICAL ELEVATION
SCALE: 1/4" = 1' - 0"

8 "F" TRACK
SCALE : HALF SIZE

FASTENER @ 12" O.C. FOR DESIGN LOADS LESS THAN OR EQUAL TO 110 P.S.F. & @ 8" O.C. FOR DESIGN LOADS GREATER THAN 110 P.S.F. (SEE ANCHOR SCHEDULE FOR ANY ACCEPTABLE ANCHOR)

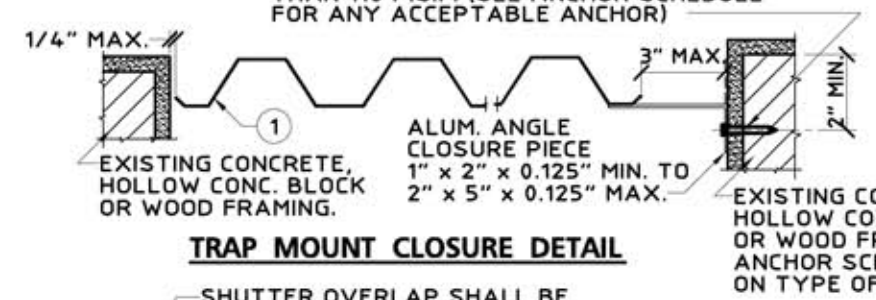

TRAP MOUNT CLOSURE DETAIL

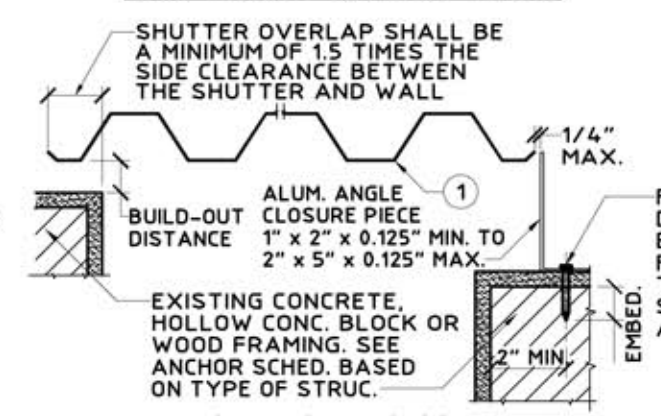

BUILD-OUT MOUNT CLOSURE DETAIL

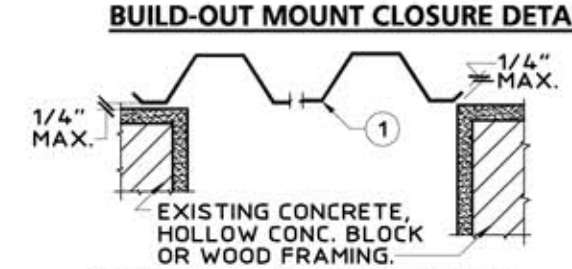

WALL MOUNT CLOSURE DETAIL

TYPICAL CLOSURE DETAILS (PLAN)
SCALE: 1-1/2" = 1'-0"

eyewall Armor
HURRICANE PROTECTION

THE SEAL APPEARING ON THIS DOCUMENT WAS AUTHORIZED BY V. JOHN KNEZEVICH, PE 0010983 ON 03/09/2012. THIS DOES NOT CONSTITUTE AN ELECTRONIC SIGNATURE; ORIGINAL, SIGNED & SEALED HARD COPIES TO THE APPROPRIATE AGENCY WILL FOLLOW.

KNEZEVICH ASSOCIATES
Consulting Engineers * COA 27989
2590 S.W. 105th Terrace * Davie, Florida 33324
T (954) 821-6933 * VJ@Knezevich-Associates.com
www.Knezevich-Associates.com

Copyright © 2012 VJKnezevich & Associates, LLC d/b/a Knezevich Associates

0.0615" ALUMINUM STORM PANEL

Town & Country INDUSTRIES
Wholesale Aluminum and Building Products
A DIVISION OF ABC SUPPLY, INC.
400 WEST McNAB ROAD * FORT LAUDERDALE, FL 33309
PHONE 954.970.9999 * FAX 954-970-9988

revisions			
no.	date	by	description

V. JOHN KNEZEVICH
Professional Engineer
FL License No. PE 0010983
NO. 10983
STATE OF FLORIDA
PROFESSIONAL ENGINEER
MAR 09 2012

scale: AS NOTED
date: 03/09/2012
drawing no. 12-129
sheet 1 of 6

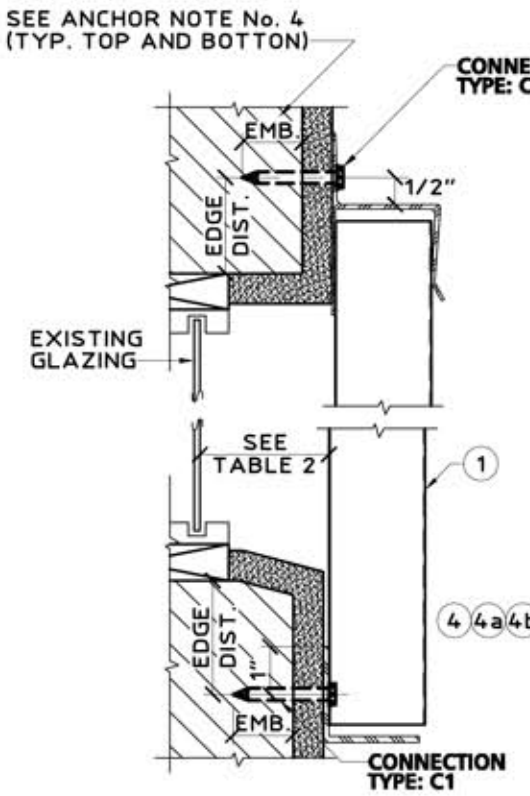

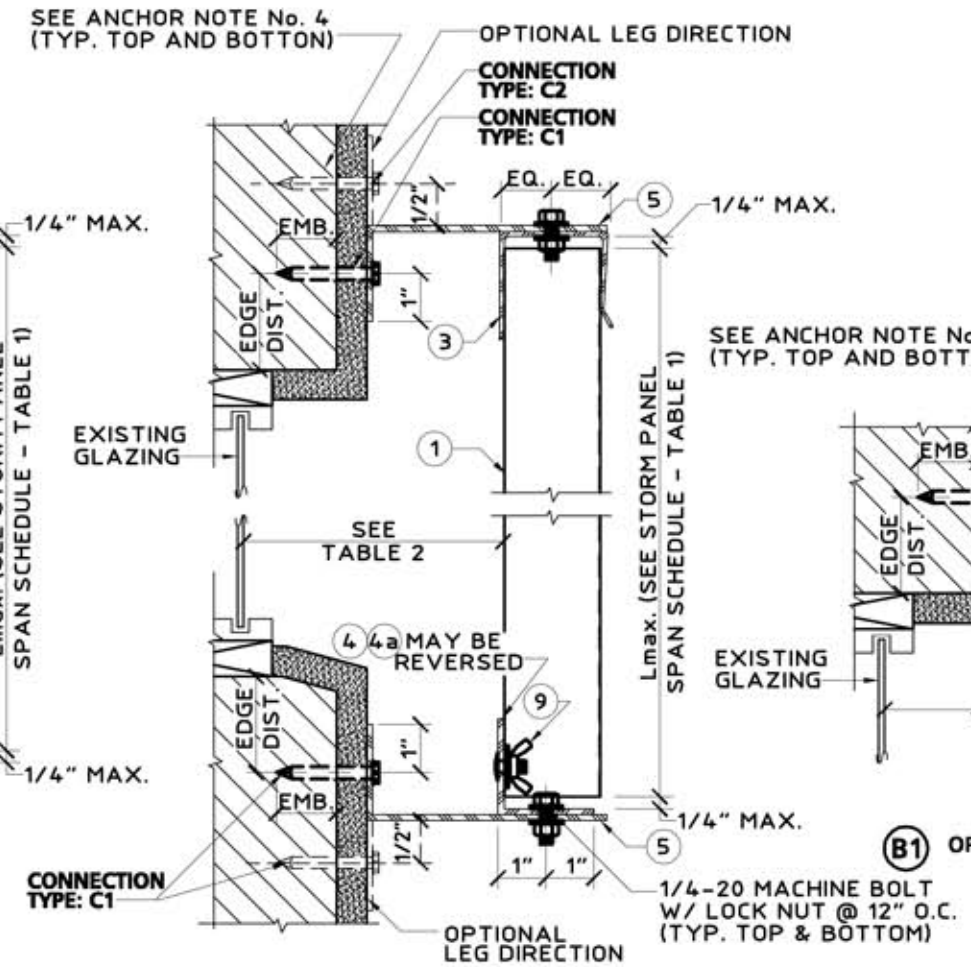

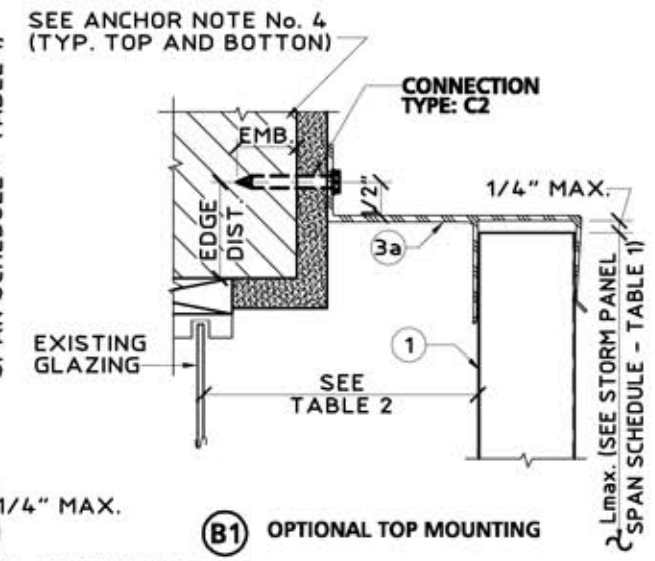

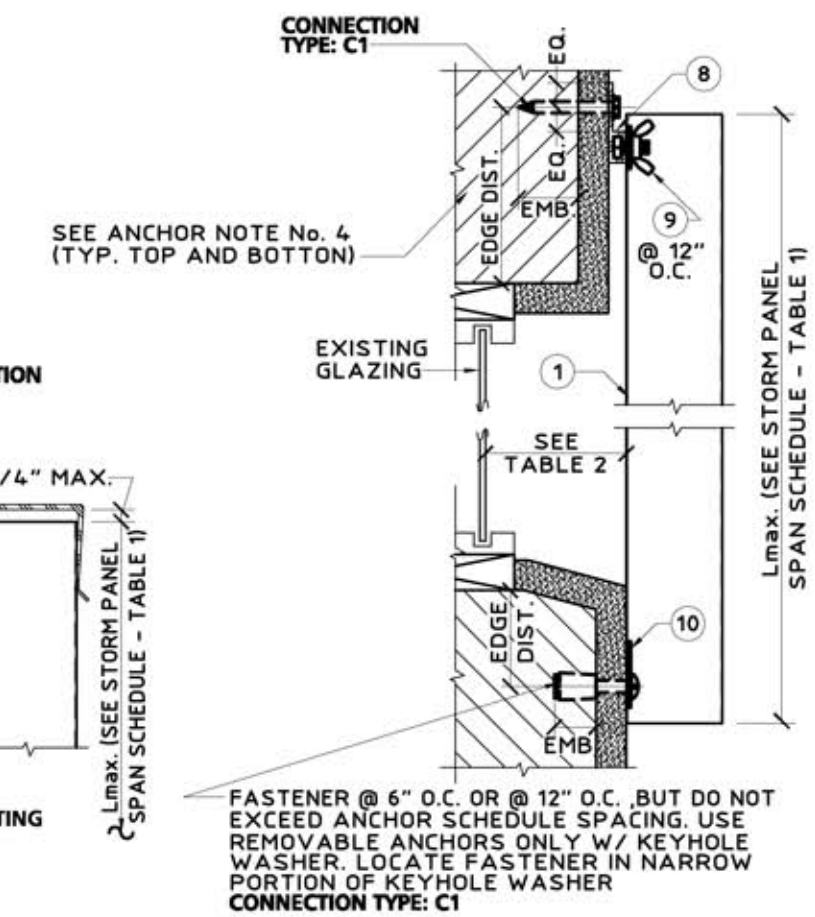

(A) **WALL MOUNT SECTION**
SCALE: 3" = 1' - 0"

(B1) **OPTIONAL TOP MOUNTING**

(B) **BUILD-OUT MOUNT SECTION**
SCALE: 3" = 1' - 0"

(C) **"F" TRACK/DIRECT MOUNT SECTION**
SCALE: 3" = 1' - 0"

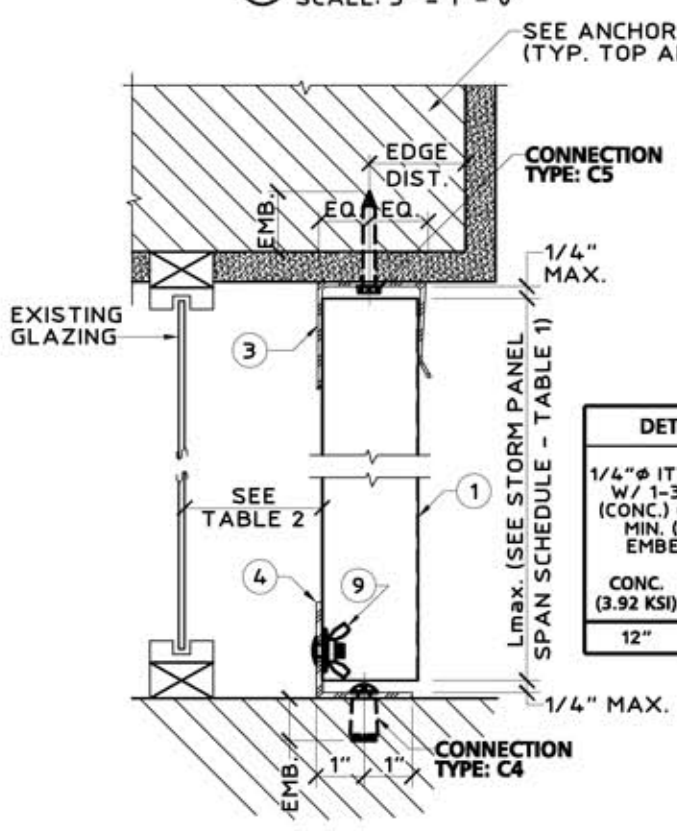

DETAIL (E) ("PASS THRU" SEC.) ANCHOR SCHEDULE			
1/4"Φ ITW TAPCON W/ 1-3/4" MIN. (CONC.) OR 1-1/4" MIN. (BLOCK) EMBEDMENT		1/4"Φ POWERS CALK-IN W/ 7/8" EMBEDMENT & 1/4-20 STAINLESS STEEL MACHINE SCREW	1/4"Φx MIN. 2-1/2" LONG WOOD LAG SCREW W/ MINIMUM 1-3/4" EMBEDMENT SHEAR PARALLEL OR PERPENDICULAR TO WOOD GRAIN
CONC. (3.92 KSI)	HOLLOW C-90 BLOCK CONC.	CONC. (2.00 KSI)	WOOD
12"	4"	7"	12"

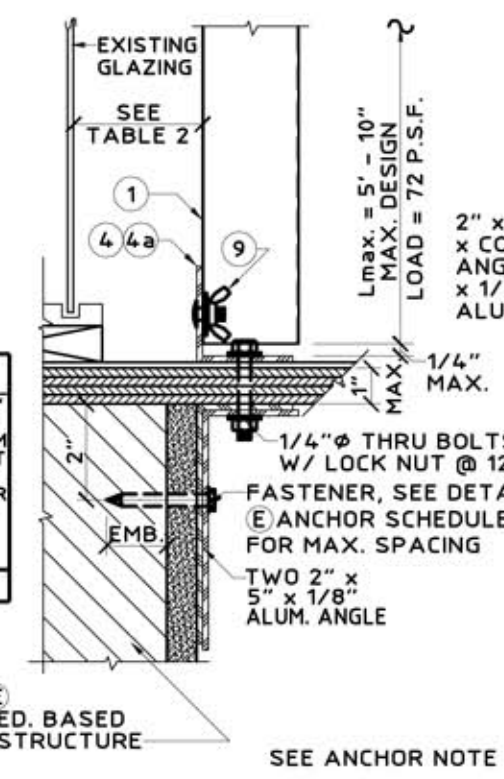

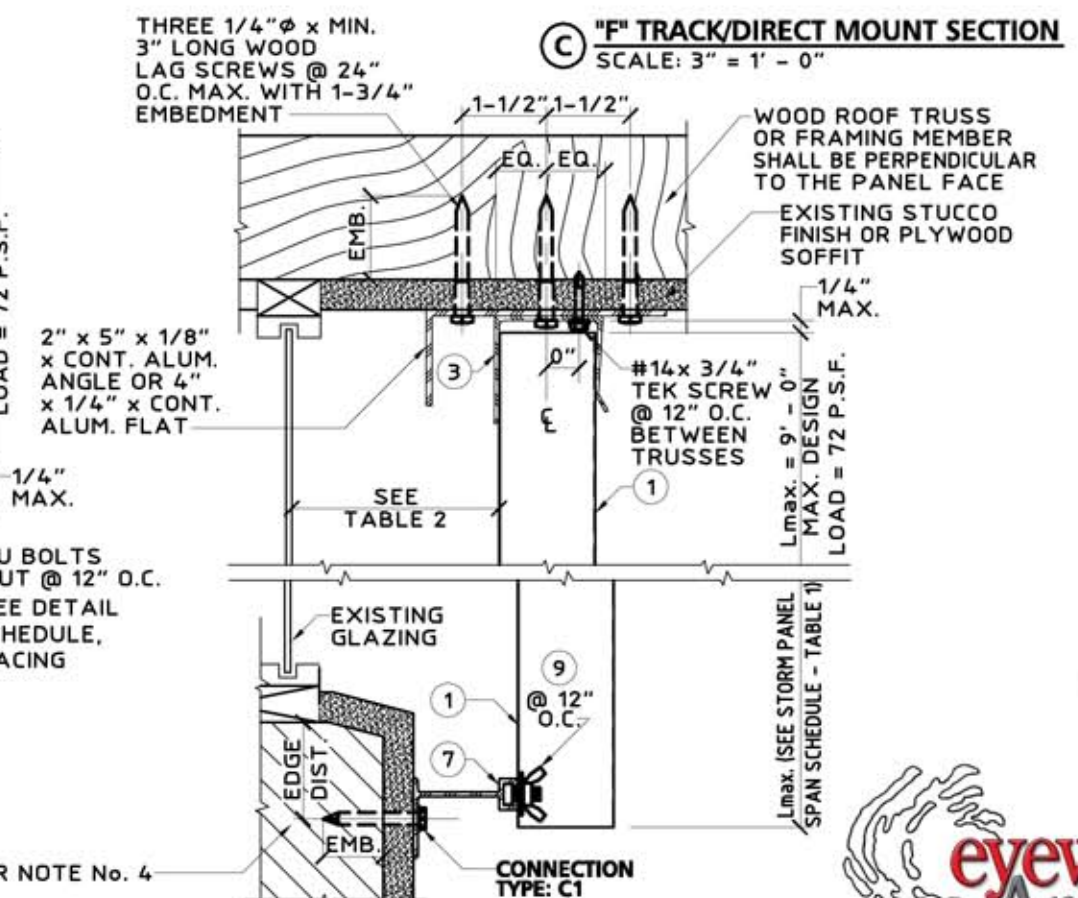

(D) **CEILING/FLOOR MOUNT SECTION**
SCALE: 3" = 1' - 0"

(E) **"PASS THRU" SECTION**
SCALE: 3" = 1' - 0"

(F) **CEILING MOUNT / BUILD OUT SECTION**
SCALE: 3" = 1' - 0"

eyewall Armor
HURRICANE PROTECTION

KNEZEVICH ASSOCIATES
Consulting Engineers * COA 27989
2590 S.W. 105th Terrace * Davie, Florida 33324
T (954) 821-6933 * VJ@Knezevich-Associates.com
www.Knezevich-Associates.com

Copyright © 2012 VJKnezevich & Associates, LLC d/b/a Knezevich Associates

THE SEAL APPEARING ON THIS DOCUMENT WAS AUTHORIZED BY V. JOHN KNEZEVICH, PE 0010983 ON 03/09/2012. THIS DOES NOT CONSTITUTE AN ELECTRONIC SIGNATURE; ORIGINAL, SIGNED & SEALED HARD COPIES TO THE APPROPRIATE AGENCY WILL FOLLOW.

0-0615"
ALUMINUM STORM PANEL

Town & Country INDUSTRIES
Wholesale Aluminum and Building Products
A DIVISION OF ABC SUPPLY, INC.
400 WEST MCNAB ROAD * FORT LAUDERDALE, FL 33309
PHONE 954.970.9999 * FAX 954-970-9988

revisions			
no	date	by	description

V. JOHN KNEZEVICH
Professional Engineer
FL License No. PE 0010983
STATE OF FLORIDA
PROFESSIONAL ENGINEER
MAR 09 2012

drawn by: AS NOTED
date: 03/09/2012
drawing no. 12-129
sheet 2 of 6

C:_MiDi_Projects\MiDisparate_CAD\VJKnezevich\CAD2012\12-129_T&C_0615\R0-sub\12-129-02.dwg, 4/22/2012 7:54:39 AM, Ledger, 1:1, www.MiDisparate.com

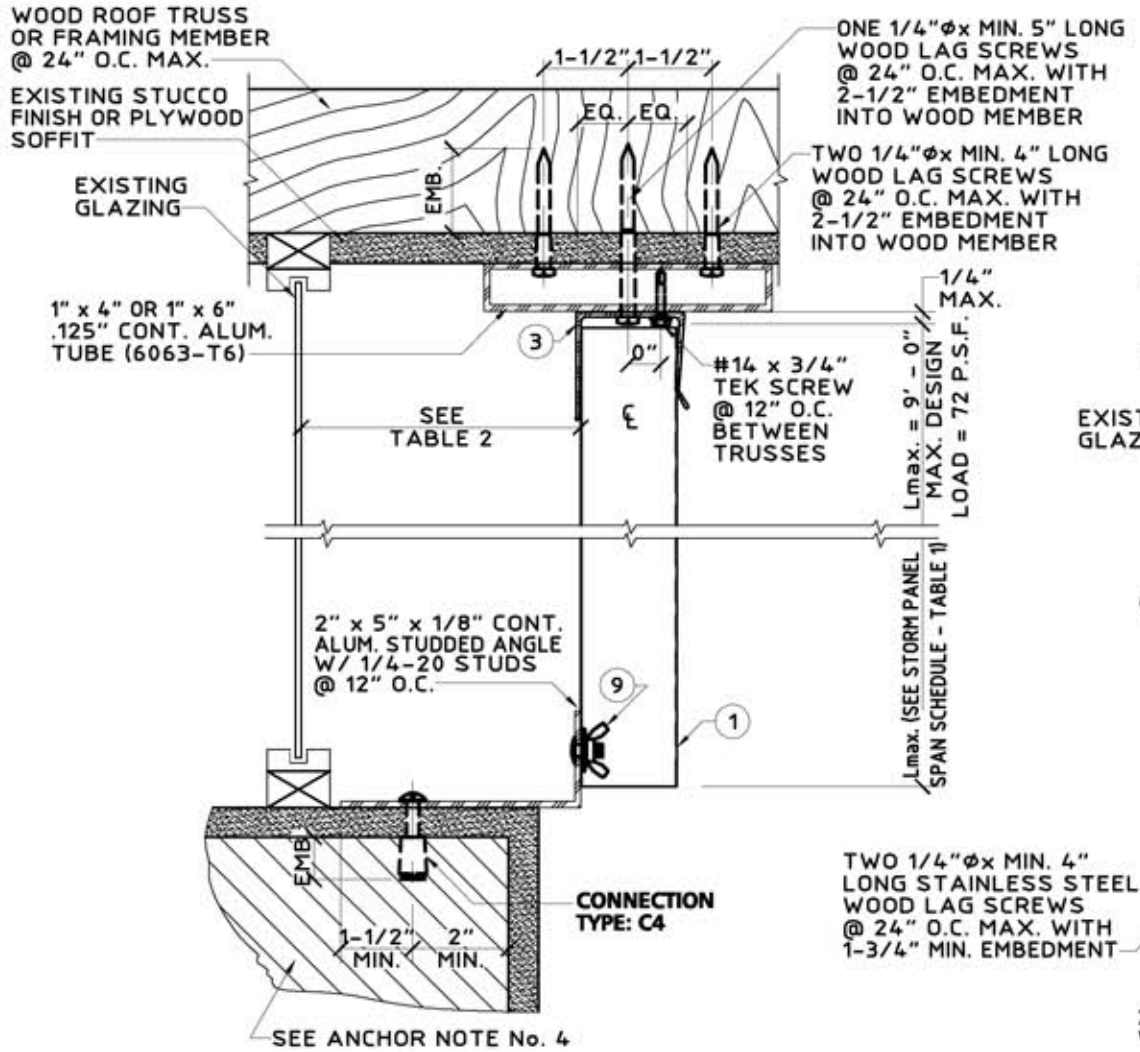

G BUILD-DOWN / BUILD-OUT SECTION
SCALE: 3" = 1' - 0"

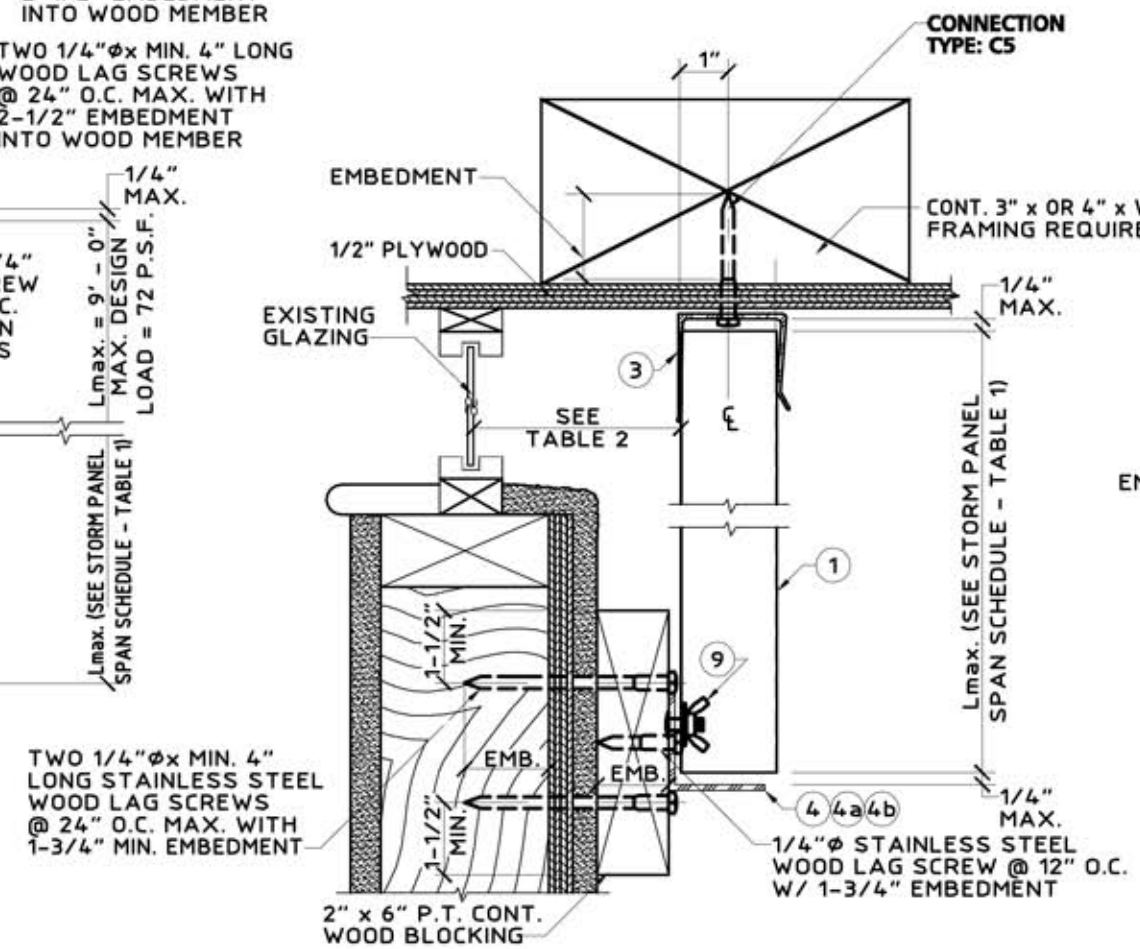

H CEILING/BUILD-OUT MOUNT SECTION
SCALE: 3" = 1' - 0"

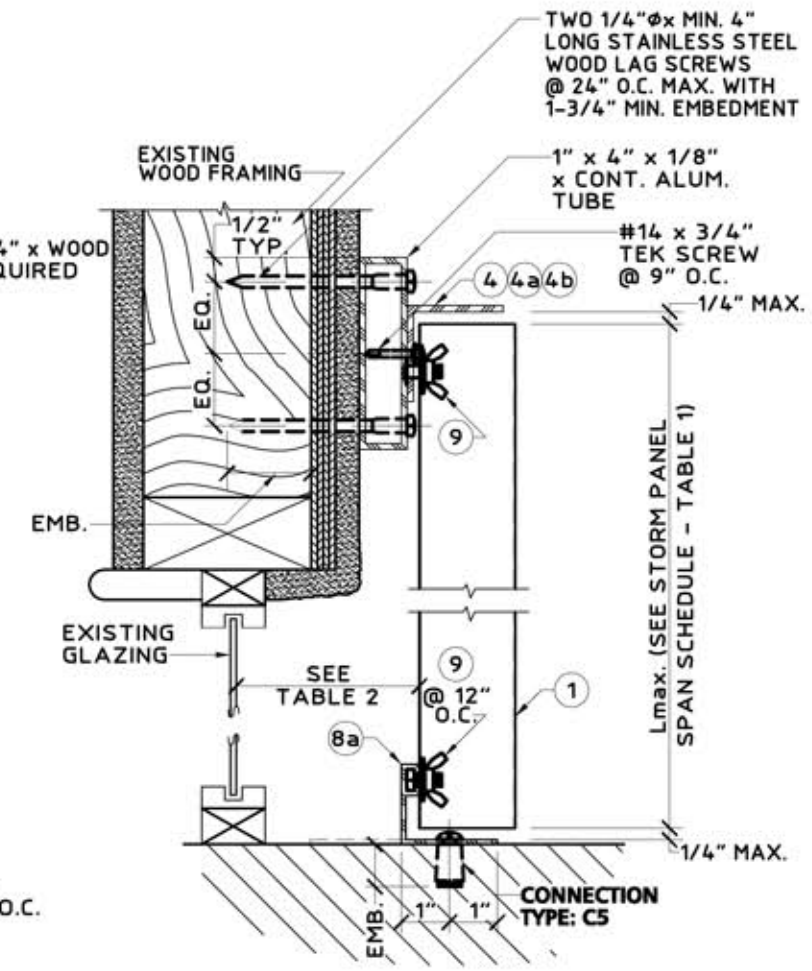

J BUILD-OUT/FLOOR MOUNT SECTION
SCALE: 3" = 1' - 0"

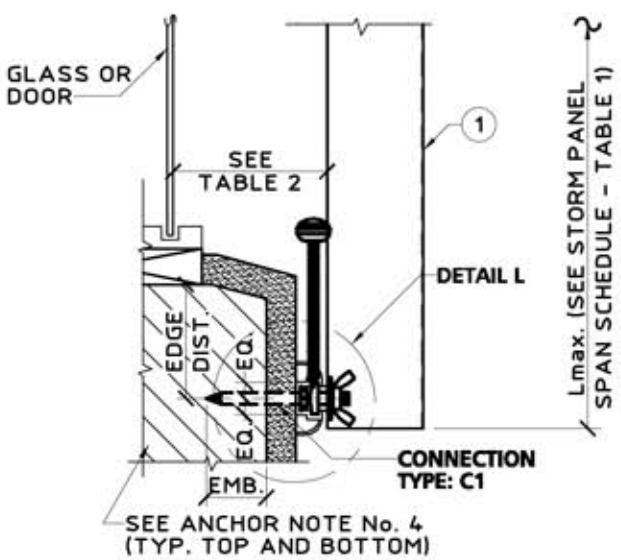

NOTE: USE OF DETAIL SHALL BE IN CONJUNCTION WITH AN " h " HEADER OR " U " HEADER TOP MOUNT

K C-TRACK ASSEMBLY - INSIDE MOUNT
SCALE: 3" = 1' - 0"

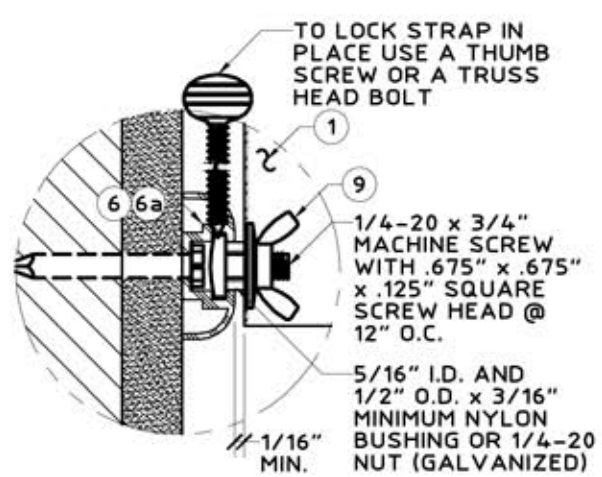

L C-TRACK ASSEMBLY - (BLOW UP)
SCALE: HALF SIZE

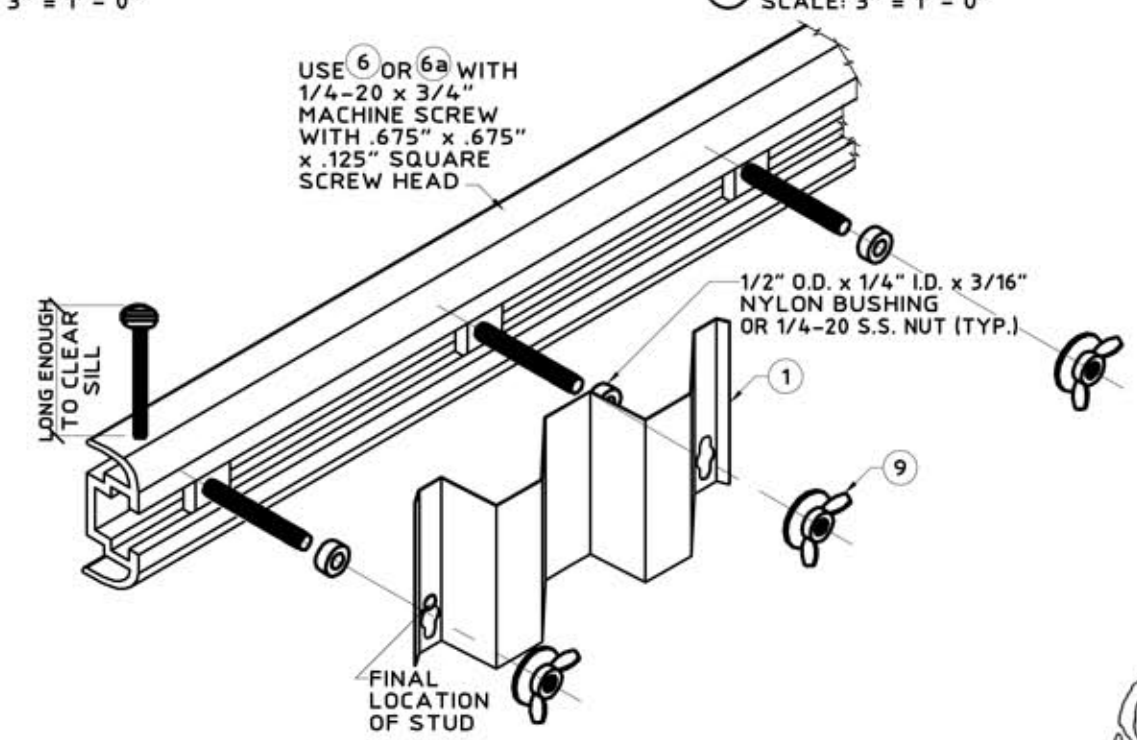

M C-TRACK ASSEMBLY (ISOMETRIC VIEW)
N.T.S.

eyewall Armor
HURRICANE PROTECTION

THE SEAL APPEARING ON THIS DOCUMENT WAS AUTHORIZED BY V. JOHN KNEZEVICH, PE 0010983 ON 03/09/2012. THIS DOES NOT CONSTITUTE AN ELECTRONIC SIGNATURE; ORIGINAL, SIGNED & SEALED HARD COPIES TO THE APPROPRIATE AGENCY WILL FOLLOW.

KNEZEVICH ASSOCIATES
Consulting Engineers * COA 27989
2590 S.W. 105th Terrace * Davie, Florida 33324
T (954) 821-6933 * VJ@Knezevich-Associates.com
www.Knezevich-Associates.com

Copyright © 2012 VJKnezevich & Associates, LLC d/b/a Knezevich Associates

0-0615
ALUMINUM STORM PANEL

Town&Country INDUSTRIES
Wholesale Aluminum and Building Products
A DIVISION OF ABC SUPPLY, INC.
400 WEST MCNAB ROAD * FORT LAUDERDALE, FL. 33309
PHONE 954.970.9999 * FAX 954-970-9988

revisions			
no.	date	by	description

V. J. Knezevich
Professional Engineer
FL License No. PE 0010983
STATE OF FLORIDA
MAR 09 2012

drawn by: VJK | scale: AS NOTED
date: 03/09/2012
drawing no. 12-129
sheet 3 of 6

C:_MiDi_Projects\MiDisparate_CAD\VJKnezevich\CAD2012\12-129_T&C_0615\R0-sub\12-129-03.dwg, 4/22/2012 7:55:59 AM, Ledger, 1:1, www.MiDisparate.com

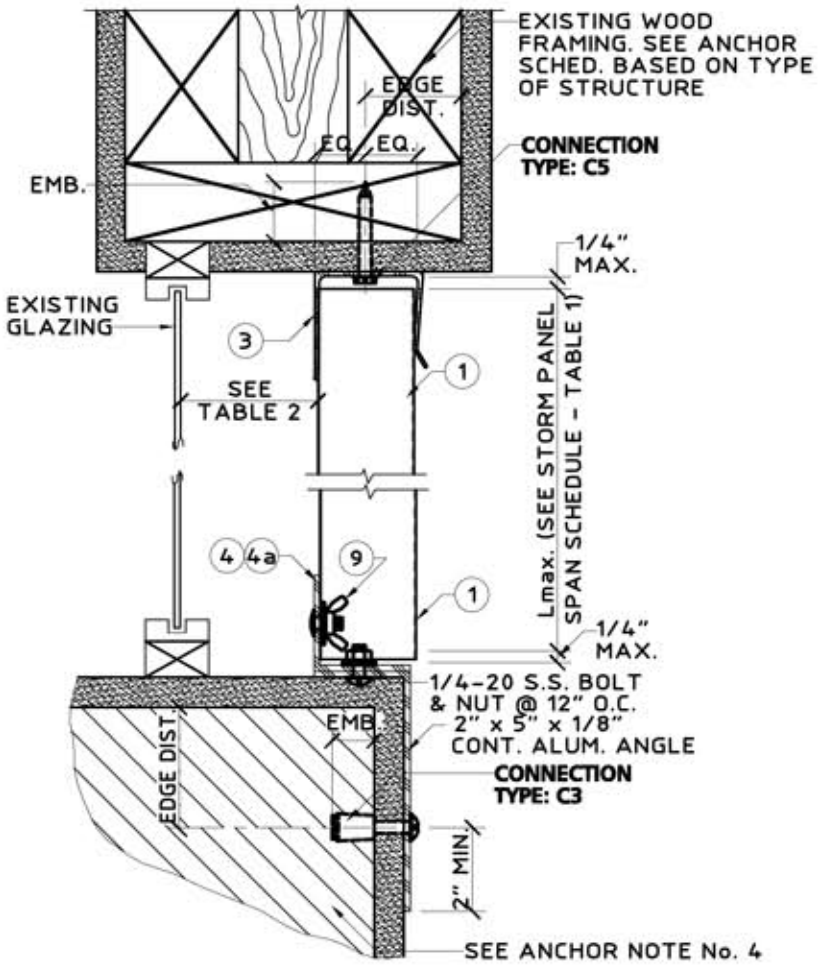

(N) WOOD CEILING/ INSIDE MOUNT SECTION

SCALE: 3" = 1'-0"

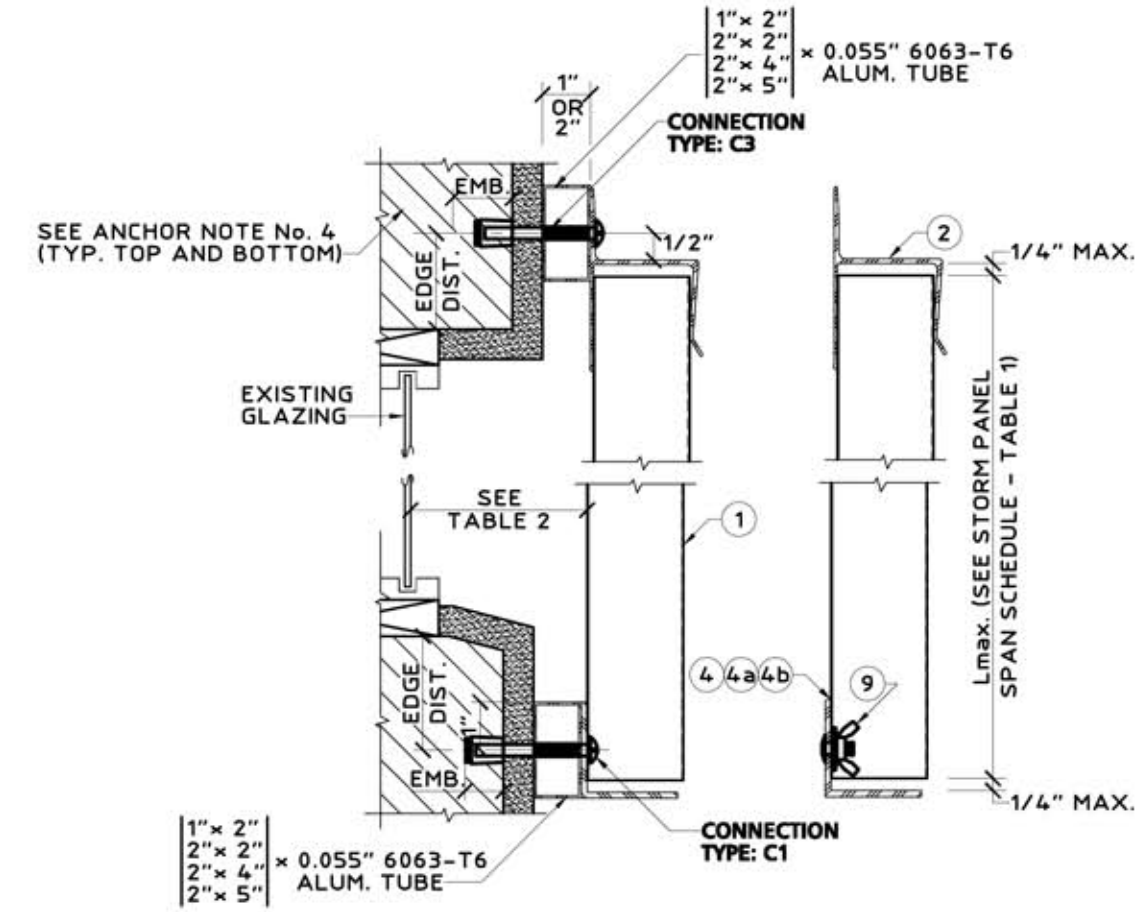

(P) WALL MOUNT SECTION

SCALE: 3" = 1' - 0"

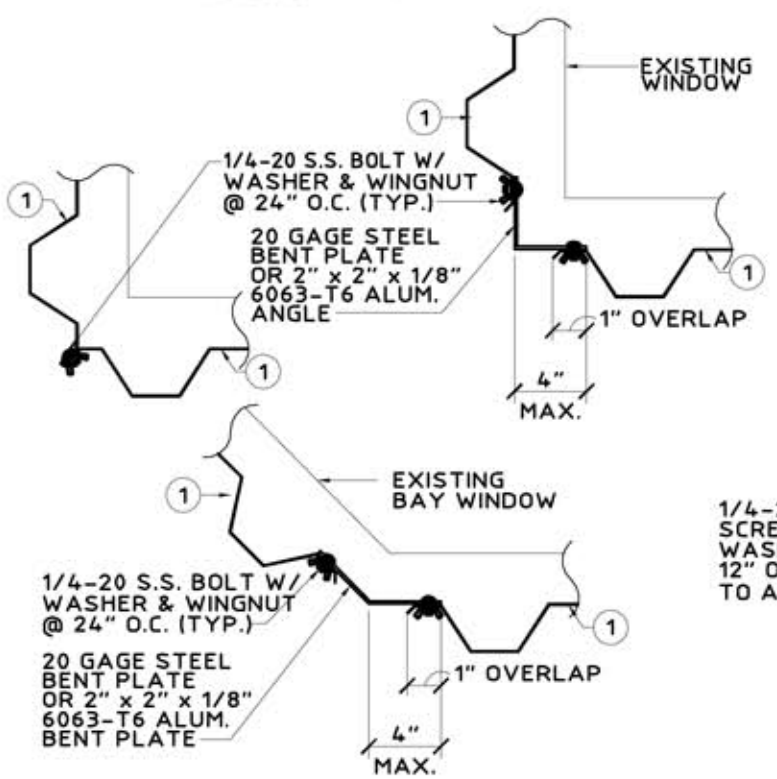

(R) TYPICAL CORNER CLOSURE DETAILS (PLAN)

SCALE: 1-1/2" = 1'-0"

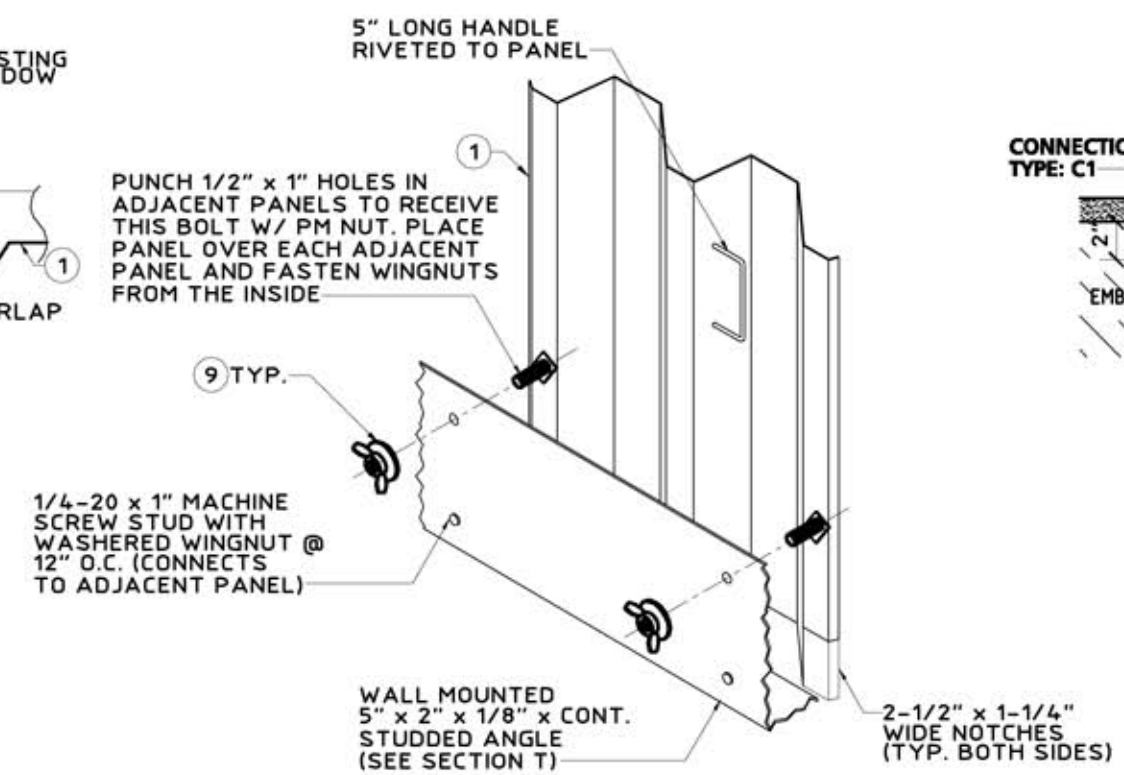

(S) OPTIONAL INTERIOR FASTENING DETAIL (ISOMETRIC)

N.T.S.

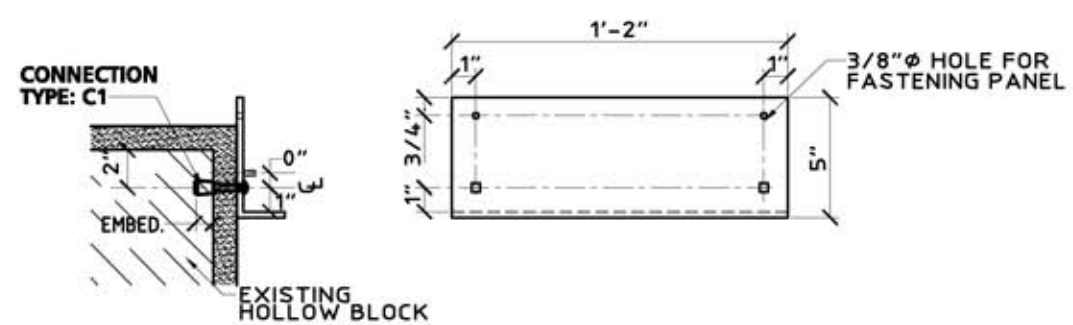

(MAX. PANEL HEIGHT = 7' - 4" & MAX. DESIGN LOAD ±72.00 P.S.F.)

(T) INTERIOR FASTENING ANGLE ASSEMBLY

SCALE: 1-1/2" = 1'-0"

DETAILS (S) & (T) NOTE:

THESE DETAILS DEPICT THE CONNECTION OF THE LAST PANEL FOR AN OPENING WITH PANELS INSTALLED FROM INSIDE. USE OF THESE DETAILS SHALL BE IN CONJUNCTION WITH AN "h" HEADER OR "U" HEADER TOP MOUNT.

eyewall Armor
HURRICANE PROTECTION

THE SEAL APPEARING ON THIS DOCUMENT WAS AUTHORIZED BY V. JOHN KNEZEVICH, PE 0010983 ON 03/09/2012. THIS DOES NOT CONSTITUTE AN ELECTRONIC SIGNATURE; ORIGINAL, SIGNED & SEALED HARD COPIES TO THE APPROPRIATE AGENCY WILL FOLLOW.

KNEZEVICH ASSOCIATES
Consulting Engineers * COA 27989
2590 S.W. 105th Terrace * Davie, Florida 33324
T (954) 821-6933 * VJ@Knezevich-Associates.com
www.Knezevich-Associates.com

Copyright © 2012 VJKnezevich & Associates, LLC d/b/a Knezevich Associates

0.061 5" ALUMINUM STORM PANEL

Town&Country INDUSTRIES
Wholesale Aluminum and Building Products
A DIVISION OF ABC SUPPLY, INC.
400 WEST McNAB ROAD * FORT LAUDERDALE, FL. 33309
PHONE 954.970.9999 * FAX 954-970-9988

revisions			
no.	date	by	description

V. J. Knezevich
Professional Engineer
FL License No. PE 0010983
STATE OF FLORIDA
MAR 09 2012

drawn by: VJK
scale: AS NOTED
date: 03/09/2012
drawing no. 12-129
sheet 4 of 6

C:_MiDi_Projects\MiDisparate_CAD\VJKnezevich\CAD2012\12-129_T&C_0615\R0-sub\12-129-04.dwg, 4/22/2012 7:55:43 AM, Ledger, 1:1, www.MiDisparate.com

ANCHOR SCHEDULE

FASTENER MAXIMUM SPACING (INCHES) REQUIRED FOR VARIOUS DESIGN LOADS AND SPANS

EXIST. STRUC.	ANCHOR TYPE	LOAD (W) P.S.F. MAX. (SEE NOTE 1)	MIN. 2" EDGE DISTANCE															MIN. 3" EDGE DISTANCE														
			SPANS UP TO 6'-0'' (SEE NOTE 1) CONNECTION TYPE (SEE NOTE 3)					SPANS UP TO 8'-8'' (SEE NOTE 1) CONNECTION TYPE (SEE NOTE 3)					SPANS UP TO 12'-0'' (SEE NOTE 1) CONNECTION TYPE (SEE NOTE 3)					SPANS UP TO 6'-0'' (SEE NOTE 1) CONNECTION TYPE (SEE NOTE 3)					SPANS UP TO 8'-8'' (SEE NOTE 1) CONNECTION TYPE (SEE NOTE 3)					SPANS UP TO 12'-0'' (SEE NOTE 1) CONNECTION TYPE (SEE NOTE 3)				
			C1	C2	C3	C4	C5	C1	C2	C3	C4	C5	C1	C2	C3	C4	C5	C1	C2	C3	C4	C5	C1	C2	C3	C4	C5	C1	C2	C3	C4	C5
CONCRETE	1/4"φ ITW TAPCON W/ 1-3/4" MIN. EMBEDMENT (MIN. 3,192 P.S.I. CONCRETE)	43.0	14	14	14	14	14	14	14	14	12	10	14	14	8	8	7	14	14	14	14	14	14	14	14	14	12	14	14	8	10	9
		50.0	14	14	14	14	13	14	14	12	10	9	14	14	6	7	6	14	14	14	14	14	14	14	12	12	10	14	14	6	9	7
		72.0	14	14	12	10	9	14	13	5	7	6	14	6	4	5	5	14	14	12	12	10	14	13	6	8	7	14	6	4	7	5
		84.0	14	14	8	9	7	14	7	4	6	5	14	6	4	5	5	14	14	9	10	9	14	8	4	7	6	14	6	4	7	5
		150.0	14	6	4	5	5	14	6	4	5	5	14	6	4	5	5	14	6	4	7	5	14	6	4	7	5	14	6	4	7	5
	* 1/4"φ POWERS CALK-IN W/ 7/8" EMBEDMENT & 1/4-20 STAINLESS STEEL MACHINE SCREW (MIN. 2,000 P.S.I. CONCRETE)	43.0																14	14	14	14	12	14	14	11	10	8	14	14	4	7	6
		50.0																14	14	14	13	10	14	14	7	9	7	12	9	3	6	5
		72.0																14	14	7	9	7	12	7	3	6	5	9	3		5	4
		84.0																14	14	5	7	6	10	4		5	4	9	3		5	4
		150.0																9	3		5	4	9	3		5	4	9	3		5	4
	* 1/4"φ ELCO MALE/ FEMALE "PANELMATE" W/ 1-7/8" MIN. EMBED. & 1/4-20 MACHINE SCREW WITH NUT (MIN. 3,000 P.S.I. CONCRETE)	43.0	12	12	12	12	12	12	12	12	11	10	12	12	6	8	7	12	12	12	12	12	12	12	12	12	12	12	12	8	10	9
		50.0	12	12	12	12	12	12	12	9	10	8	12	12	4	7	6	12	12	12	12	12	12	12	12	12	10	12	12	6	9	7
		72.0	12	12	9	10	8	12	10	4	7	5	12	5	3	5	4	12	12	12	12	10	12	12	5	8	7	12	6	3	7	5
		84.0	12	12	6	8	7	12	6	3	6	5	12	5	3	5	4	12	12	8	10	9	12	7	4	7	6	12	6	3	7	5
		150.0	12	5	3	5	4	12	5	3	5	4	12	5	3	5	4	12	6	3	7	5	12	6	3	7	5	12	6	3	7	5
	1/4"φ ELCO CRETE FLEX W/ 1-3/4" MIN. EMBEDMENT (MIN. 3,350 P.S.I. CONCRETE)	43.0	14	14	14	14	14	14	14	14	14	14	14	14	8	12	10	14	14	14	14	14	14	14	14	14	14	14	14	9	14	12
		50.0	14	14	14	14	14	14	14	12	14	12	14	14	6	10	8	14	14	14	14	14	14	14	13	14	14	14	14	6	12	10
		72.0	14	14	12	14	12	14	13	5	10	8	14	6	4	8	6	14	14	14	14	14	14	14	6	12	9	14	7	4	9	7
		84.0	14	14	8	12	10	14	8	4	8	7	14	6	4	8	6	14	14	9	14	12	14	9	5	10	8	14	7	4	9	7
		150.0	14	6	4	8	6	14	6	4	8	6	14	6	4	8	6	14	7	4	9	7	14	7	4	9	7	14	7	4	9	7
	1/4"φ ELCO TAPCON W/ 1-1/2" MIN. EMBEDMENT (MIN. 3,320 P.S.I. CONCRETE)	43.0	14	14	14	14	12	14	14	10	10	8	13	13	4	7	6	14	14	14	14	14	14	14	12	13	10	14	14	5	9	7
		50.0	14	14	14	13	10	14	14	6	9	7	11	8	3	6	5	14	14	14	14	13	14	14	8	11	9	14	10	4	8	6
		72.0	14	14	6	9	7	11	7	3	6	5	9	3		5	4	14	14	8	11	9	14	8	3	7	6	11	4		6	5
		84.0	14	14	4	7	6	9	4		5	4	9	3		5	4	14	14	5	9	7	12	5		6	5	11	4		6	5
		150.0	9	3		5	4	9	3		5	4	9	3		5	4	11	4		6	5	11	4		6	5	11	4		6	5
HOLLOW CONCRETE BLOCK	1/4"φ ITW TAPCON W/ 1-1/4" MIN. EMBEDMENT	43.0	14	14	14	8	6	10	10	5	5	4	7	7		4	3	14	14	14	10	8	12	12	6	7	5	9	9		5	4
		50.0	13	13	13	7	5	9	9	3	5	4	6	4		3		14	14	14	8	7	10	10	4	6	4	7	5		4	3
		72.0	9	9	3	5	4	6	4		3		5					10	10	4	6	4	7	4		4	3	5			3	
		84.0	7	7		4	3	5			3		5					9	9	3	5	4	6			3		5			3	
		150.0	5					5					5					5			3		5			3		5			3	
	* 1/4"φ POWERS CALK-IN W/ 7/8" EMBEDMENT & 1/4-20 STAINLESS STEEL MACHINE SCREW	43.0																9	9	9	7	5	6	6	3	5	3	4	4		3	
		50.0																8	8	8	6	4	5	5		4	3	4	3		3	
		72.0																5	5		4	3	4			3		3				
		84.0																5	5		3		3					3				
		150.0																3					3					3				
	* 1/4"φ ELCO MALE/ FEMALE "PANELMATE" W/ 1-1/4" MIN. EMBED. & 1/4-20 MACHINE SCREW WITH NUT	43.0	12	12	12	10	8	12	12	8	7	5	11	11	3	5	4	12	12	12	11	9	12	12	9	8	6	12	12	3	5	4
		50.0	12	12	12	8	7	12	12	5	6	5	10	7		4	3	12	12	12	10	8	12	12	5	7	5	10	7		5	4
		72.0	12	12	5	6	5	9	6		4	3	7	3		3		12	12	5	7	5	10	6		4	4	8	3		3	3
		84.0	12	12	3	5	4	8	3		3	3	7	3		3		12	12	4	6	4	8	3		4	3	8	3		3	3
		150.0	7	3		3		7	3		3		7	3		3		8	3		3	3	8	3		3	3	8	3		3	3
	1/4"φ ELCO CRETE FLEX W/ 1-1/4" MIN. EMBEDMENT	43.0	14	14	14	14	11	14	14	9	9	7	12	12	4	7	5	14	14	14	14	11	14	14	10	9	8	13	13	4	7	5
		50.0	14	14	14	12	9	14	14	6	8	6	11	7	3	6	4	14	14	14	12	9	14	14	6	8	6	11	8	3	6	4
		72.0	14	14	6	8	6	10	6		5	4	8	3		4	3	14	14	6	8	6	11	7	3	5	4	8	3		4	3
		84.0	13	13	4	7	5	9	4		4	4	8	3		4	3	13	13	4	7	5	9	4		5	4	8	3		4	3
		150.0	8	3		4	3	8	3		4	3	8	3		4	3	8	3		4	3	8	3		4	3	8	3		4	3
	1/4"φ ELCO TAPCON W/ 1-1/4" MIN. EMBEDMENT	43.0	14	14	14	10	8	11	11	6	7	5	8	8		5	4	14	14	14	13	10	14	14	7	9	7	10	10	3	6	5
		50.0	13	13	13	9	7	9	9	3	6	4	6	4		4	3	14	14	14	11	8	12	12	4	7	6	8	6		5	4
		72.0	9	9	3	6	4	6	4		4	3	5			3		12	12	4	7	6	8	5		5	4	6			4	3
		84.0	8	8		5	4	5			3		5			3		10	10	3	6	5	7	3		4	3	6			4	3
		150.0	5			3		5			3		5			3		6			4	3	6			4	3	6			4	3

ANCHOR SCHEDULE

FASTENER MAXIMUM SPACING (INCHES) REQUIRED FOR VARIOUS DESIGN LOADS AND SPANS

EXIST. STRUC.	ANCHOR TYPE	LOAD (W) P.S.F. MAX. (SEE NOTE 1)	MIN. 3/4" EDGE DISTANCE														
			SPANS UP TO 6'-0'' (SEE NOTE 1) CONNECTION TYPE (SEE NOTE 3)					SPANS UP TO 8'-8'' (SEE NOTE 1) CONNECTION TYPE (SEE NOTE 3)					SPANS UP TO 12'-0'' (SEE NOTE 1) CONNECTION TYPE (SEE NOTE 3)				
			C1	C2	C3	C4	C5	C1	C2	C3	C4	C5	C1	C2	C3	C4	C5
WOOD	2" MIN. 1/4"φ x MIN. 3" LONG LAG SCREW W/ MIN. 2" EMBED. SHEAR PARALLEL OR PERP. TO WOOD GRAIN	43.0	14	14	14	13	12	14	14	14	9	8	14	14	9	6	6
		50.0	14	14	14	11	10	14	14	14	8	7	14	14	7	5	5
		72.0	14	14	14	8	7	14	14	6	5	5	14	7	4	4	4
		84.0	14	14	9	7	6	14	9	5	4	4	14	7	4	4	4
		150.0	14	7	4	4	4	14	7	4	4	4	14	7	4	4	4
	* 7/16"φ WOOD BUSHING W/ 5/8" MIN. EMBED. & 1/4-20 STAINLESS STEEL MACHINE SCREW	43.0	14	14	14			13	13	7			9	9	3		
		50.0	14	14	14			11	11	4			8	5			
		72.0	11	11	4			7	4				6				
		84.0	9	9	3			6					6				
		150.0	6					6					6				
	* 1/4"φ ELCO MALE/ FEMALE "PANELMATE" W/ 1-7/8" MIN. EMBED. & 1/4-20 MACHINE SCREW WITH NUT	43.0	14	14	14	14	11	14	14	11	9	8	14	14	4	7	5
		50.0	14	14	14	12	10	14	14	7	8	7	13	9	3	6	5
		72.0	14	14	7	8	7	12	7	3	5	4	10	3		4	3
		84.0	14	14	5	7	6	10	4		5	4	10	3		4	3
		150.0	10	3		4	3	10	3		4	3	10	3		4	3

ANCHOR NOTES:

1. **SPANS AND LOADS SHOWN HERE ARE FOR DETERMINING ANCHOR SPACING ONLY. ALLOWABLE STORM PANEL SPANS FOR SPECIFIC LOADS MUST BE LIMITED TO THOSE SHOWN IN TABLE 1.**
2. ENTER ANCHOR SCHEDULE BASED ON THE EXISTING STRUCTURE MATERIAL, ANCHOR TYPE AND EDGE DISTANCE. SELECT DESIGN LOAD GREATER THAN OR EQUAL TO NEGATIVE DESIGN LOAD ON SHUTTER AND SELECT SPAN GREATER THAN OR EQUAL TO SHUTTER SPAN.
3. SEE MOUNTING SECTION DETAILS FOR IDENTIFICATION OF CONNECTION TYPE.
4. EXISTING STRUCTURE MAY BE CONCRETE, HOLLOW CONCRETE BLOCK OR WOOD FRAMING. REFERENCE ANCHOR SCHEDULE FOR PROPER ANCHOR TYPE BASED ON TYPE OF EXISTING STRUCTURE.
5. ANCHORS SHALL BE INSTALLED IN ACCORDANCE WITH MANUFACTURERS' RECOMMENDATIONS.
6. MINIMUM EMBEDMENT AND EDGE DISTANCE EXCLUDES WALL FINISH OR STUCCO.
7. WHERE EXISTING STRUCTURE IS WOOD FRAMING, WOOD FRAMING CONDITIONS VARY. FIELD VERIFY THAT FASTENERS ARE INTO ADEQUATE WOOD FRAMING MEMBERS, NOT PLYWOOD. FASTENING TO PLYWOOD IS ACCEPTABLE ONLY FOR SIDE CLOSURE PIECES.
8. WHERE LAG SCREWS FASTEN TO NARROW FACE OF STUD FRAMING, FASTENER SHALL BE LOCATED IN CENTER OF NOMINAL 2" x 4" (MIN.) WOOD STUD. 3/4" EDGE DISTANCE IS ACCEPTABLE FOR WOOD FRAMING. WOOD STUD SHALL BE "SOUTHERN PINE" G=0.55 OR GREATER DENSITY. LAG SCREWS SHALL HAVE PHILLIPS PAN HEAD OR HEX HEAD.
9. MACHINE SCREWS SHALL HAVE MINIMUM OF 1/2" ENGAGEMENT OF THREADS IN BASE ANCHOR AND MAY HAVE EITHER A PAN HEAD, TRUSS HEAD, OR WAFER HEAD (SIDEWALK BOLT), U.O.N.
10. ▨ DESIGNATES ANCHOR CONDITIONS WHICH ARE NOT ACCEPTABLE USES.
11. * DESIGNATES ANCHORS WHICH ARE REMOVABLE BY REMOVING MACHINE SCREW, NUT OR WASHERED WINGNUT. POWERS CALK-IN OR THE EQUIVALENT ALL POINTS SOLID SET MAY NOT BE USED IN CONCRETE FLOOR, CEILING OR BEAMS. EXCEPTION: THESE ANCHORS MAY BE USED IN CONCRETE SLABS ON GRADE.

THE SEAL APPEARING ON THIS DOCUMENT WAS AUTHORIZED BY V. JOHN KNEZEVICH, PE 0010983 ON 03/09/2012. THIS DOES NOT CONSTITUTE AN ELECTRONIC SIGNATURE; ORIGINAL, SIGNED & SEALED HARD COPIES TO THE APPROPRIATE AGENCY WILL FOLLOW.

KNEZEVICH ASSOCIATES
Consulting Engineers * COA 27989
2590 S.W. 105th Terrace * Davie, Florida 33324
T (954) 821-6933 * VJ@Knezevich-Associates.com
www.Knezevich-Associates.com

Copyright © 2012 VJKnezevich & Associates, LLC d/b/a Knezevich Associates

0.0615" ALUMINUM STORM PANEL

Town & Country INDUSTRIES
Wholesale Aluminum and Building Products
A DIVISION OF ABC SUPPLY, INC.
400 WEST MCNAB ROAD * FORT LAUDERDALE, FL 33309
PHONE 954.970.9999 * FAX 954-970-9988

revisions			
no.	date	by	description

V. JOHN KNEZEVICH, Professional Engineer, FL License No. PE 0010983
NO. 10983 — STATE OF — MAR 09 2012 — PROFESSIONAL ENGINEER

eyewall Armor HURRICANE PROTECTION

drawn: ARN; scale: AS NOTED; date: 03/09/2012

drawing no. 12-129

C:_MiDi_Projects\MiDisparate_CAD\VJKnezevich\CAD2012\12-129_T&C_0615\R0-sub\12-129-05.dwg, 4/22/2012 7:55:35 AM, Ledger, 1:1, www.MiDisparate.com

TABLE 2 — MINIMUM STORM PANEL SEPARATION FROM GLASS

POSITIVE DESIGN LOAD (W) (P.S.F.)	ACTUAL SPAN (L) (FT – IN)	COLUMN 1: MIN. SEP. FOR ALL INSTALLATIONS LESS THAN 30' ABOVE GRADE (INCHES)	COLUMN 2: MIN. SEP. FOR ALL INSTALLATIONS GREATER THAN 30' ABOVE GRADE (INCHES)
40.0	8-8	3	1-3/4
	11-3	4-1/8	3
50.0	8-8	3	2
	10-7	4-1/8	3
60.0	6-0	3	1-1/4
	8-8	3	2-1/8
	10-1	4-1/8	3
70.0	6-0	3	1-3/8
	8-8	3	2-1/4
	9-9	4-1/8	3
80.0	6-0	3	1-3/8
	9-2	4-1/8	2-7/8
90.0	5-0	3	1-1/4
	8-8	3	2-5/8
100.0	5-0	3	1-1/4
	7-9	3	2-1/4
110.0	4-0	3	1-1/8
	7-1	3	1-7/8
120.0	4-0	3	1-1/8
	6-6	3	1-3/4

TABLE 1 NOTES:

1. DETERMINE BOTH THE POSITIVE AND THE NEGATIVE DESIGN WIND LOADS. CHECK SPANS DUE TO POSITIVE DESIGN WIND LOAD IN COLUMN A & SPANS DUE TO NEGATIVE DESIGN WIND LOAD IN COLUMN B AND USE THE LESSER VALUE OF THE TWO. NOTE: POSITIVE DESIGN WIND LOADS ARE EQUAL TO OR LESS THAN NEGATIVE DESIGN WIND LOADS.
2. FOR DESIGN LOADS BETWEEN TABULATED VALUES USE NEXT HIGHER LOAD OR LINEAR INTERPOLATION MAY BE USED TO DETERMINE ALLOWABLE SPANS.

TABLE 2 NOTE:

ENTER TABLE 2 WITH POSITIVE DESIGN LOAD TO DETERMINE MIN. STORM SHUTTER SEPARATION FROM GLASS.

TABLE 1 — MAX. ALLOWABLE STORM PANEL SPAN SCHEDULE

POSITIVE OR NEGATIVE DESIGN LOAD (P.S.F.)	Ⓐ SPANS DUE TO POS. DESIGN WINDLOADS (FT – IN)	Ⓑ SPANS DUE TO NEG. DESIGN WINDLOADS (FT – IN)
30.0	12'-0"	12'-0"
35.0	11'-7"	12'-0"
40.0	11'-3"	12'-0"
45.0	10'-11"	12'-0"
46.0	10'-10"	12'-0"
50.0	10'-7"	11'-6"
55.0	10'-4"	11'-0"
60.0	10'-1"	10'-6"
65.0	9'-11"	10'-1"
70.0	9'-9"	9'-9"
75.0	9'-6"	9'-5"
80.0	9'-2"	9'-1"
85.0	8'-11"	8'-10"
90.0	8'-8"	8'-6"
95.0	8'-2"	8'-1"
100.0	7'-9"	7'-8"
105.0	7'-4"	7'-3"
110.0	7'-1"	7'-0"
115.0	6'-9"	6'-8"
120.0	6'-6"	6'-4"
125.0	6'-3"	6'-1"
130.0	6'-1"	5'-11"
135.0	5'-9"	5'-8"
140.0	5'-6"	5'-6"
145.0	5'-4"	5'-3"
150.0	5'-2"	5'-1"
155.0	5'-0"	4'-11"
160.0	4'-10"	4'-9"
165.0	4'-8"	4'-8"
170.0	4'-7"	4'-6"
175.0	4'-5"	4'-4"
180.0	4'-4"	4'-3"
185.0	4'-2"	4'-1"
190.0	4'-1"	4'-0"
195.0	4'-1"	3'-11"
200.0	3'-10"	3'-10"

eyewall Armor HURRICANE PROTECTION

THE SEAL APPEARING ON THIS DOCUMENT WAS AUTHORIZED BY V. JOHN KNEZEVICH, PE 0010983 ON 03/09/2012. THIS DOES NOT CONSTITUTE AN ELECTRONIC SIGNATURE; ORIGINAL, SIGNED & SEALED HARD COPIES TO THE APPROPRIATE AGENCY WILL FOLLOW.

KNEZEVICH ASSOCIATES
Consulting Engineers * COA 27989
2590 S.W. 105th Terrace * Davie, Florida 33324
T (954) 821-6933 * VJ@Knezevich-Associates.com
www.Knezevich-Associates.com

Copyright © 2012 VJKnezevich & Associates, LLC d/b/a Knezevich Associates

0-0615
ALUMINUM STORM PANEL

Town&Country INDUSTRIES
Wholesale Aluminum and Building Products
A DIVISION OF ABC SUPPLY, INC.
400 WEST MONAB ROAD * FORT LAUDERDALE, FL. 33309
PHONE 954.970.9999 * FAX 954-970-9988

revisions

date	by	description

V. J. Knezevich
Professional Engineer
FL License No. PE0010983

MAR 09 2012

scale AS NOTED
date 03/09/2012
drawing no. 12-129
sheet 6 of 6